Reduced-Rank Multi-Antenna Cyclic Wiener Filtering for Interference Cancellation

Hong Zhang, Ali Abdi and Alexander Haimovich
Center for Wireless Communications and Signal Processing Research
Department of ECE, New Jersey Institute of Technology, Newark, NJ 07012 USA
Email: {hz7, ali.abdi, haimovich}@njit.edu

Abstract*— In this paper, we propose a multi-antenna frequency-shift (FRESH) filter structure which combines the time-dependent cyclic Wiener filter with spatial filtering. The new solution can be applied as a blind technique, which is desired in many applications where training signals are not available. When compared to a traditional space-time adaptive processing (STAP) architecture, our new method shows the capability of providing the same performance, but with a smaller number of antennas. This reduction in the number of array elements is critical for those applications where there are serious limitations on the size of the array, e.g., portable devices. We have also reduced the computational complexity of the multi-antenna FRESH filter, by using the multistage Wiener filter rank reduction technique. Simulation results are provided to demonstrate the usefulness of the proposed interference canceller.

I. Introduction

It is well known that man-made signals used in communication systems are cyclostationary [1]. In such cases, the classical Wiener filtering theory, developed for the stationary signal model, is not optimal. Optimal filtering of cyclostationary signals can be accomplished via the cyclic Wiener filter, also known as the frequency-shift (FRESH) filter [1] [2]. Under certain conditions, the optimal FRESH filter can provide substantial improvement over the classical Wiener filter, when used for interference rejection. In this paper we present a cyclic space-time adaptive processing (STAP) structure, by incorporating the time-dependent FRESH filter into the temporal part of the STAP. The new adaptive algorithm exploits information from not only the classical spatial and temporal domains, but also the cyclic frequency domain. This results in two major benefits. The first is that significant performance gain can be achieved, when compared to a conventional STAP which has the same number of antennas. This suggests that the cyclic STAP can provide the same performance as a conventional STAP which has a larger number of antennas. This feature is highly desirable for many portable applications. The second advantage of cyclic STAP is that it can be used blindly, when there is no desired signal known a priori. This situation appears in a number of commercial and military applications.

However, the associated computational complexity of the cyclic STAP is substantially high, as a large dimensional matrix inversion is involved in the computation of the filter coefficients. Therefore one needs to pursue reduced-rank techniques to reduce the computational complexity in practical implementations. The three major rank-reduction approaches are principal component (PC) [3] [4], cross-spectral (CS) [4] metric, and multistage Wiener filter (MSWF) [5]. We have applied these to the cyclic STAP and the simulation results show that the MSWF-based architecture can work with a smaller rank, compared to the other two methods.

The organization of this paper is as follows. An antenna array based FRESH filter (cyclic STAP) is introduced in Section II, whereas reduced-rank cyclic STAP solutions are presented in Section III. Section IV provides the simulation results and Section V concludes the paper.

II. Formulation of the Cyclic STAP

Consider an M-element STAP whose time-invariant filtering branches are replaced by time-dependent FRESH filters, as shown in Fig. 1. We call this structure the cyclic STAP. In Fig. 1, for any given time instant n, $x_m(n), m = 1, \ldots, M$, is the total received signal at the m-th branch. It is the superposition of the desired signal $s(n)$, the interfering signal $i(n)$, and the receiver noise $w(n)$ observed at the m-th branch. Therefore, the observed vector at time n can be written as

$$\begin{aligned}\tilde{\mathbf{x}}(n) &= [x_1(n)\ x_2(n)\ \ldots\ x_M(n)]^{\intercal}, \\ &= s(n)\mathbf{v}_s(\phi,\theta) + i(n)\mathbf{v}_i(\phi,\theta) + \mathbf{w}(n), \end{aligned} \tag{1}$$

where $\intercal$ stands for matrix or vector transpose, $\mathbf{v}_s(\phi,\theta)$ and $\mathbf{v}_i(\phi,\theta)$ are the spatial array manifolds of desired and interfering signals, respectively. Note that $\mathbf{w}(n)$ contains spatially uncorrelated noise components. Similar to the traditional STAP [6] [7], $d(n)$ in Fig. 1 is the reference signal. Later we will show $d(n)$ can be constructed either directly from $x_m(n)$ for blind interference cancellation, or from $s(n)$ as a training signal, to have training-based interference cancellation.

Assuming $x_m(n)$ has no conjugate spectral correlation and then using the FRESH filter theory [2], the output of the cyclic STAP can be written as

$$\begin{aligned} y(n) &= \sum_{m=1}^{M}\sum_{k=1}^{K} \hbar_{mk}(n) \otimes [x_m(n)e^{j2\pi\alpha_k n}], \\ &= \sum_{m=1}^{M}\sum_{k=1}^{K} \mathbf{h}_{mk}^{\dagger}\mathbf{x}_{mk}(n), \\ &= \sum_{m=1}^{M} \mathbf{h}_m^{\dagger}\mathbf{x}_m(n), \end{aligned} \tag{2}$$

where we have the following definitions

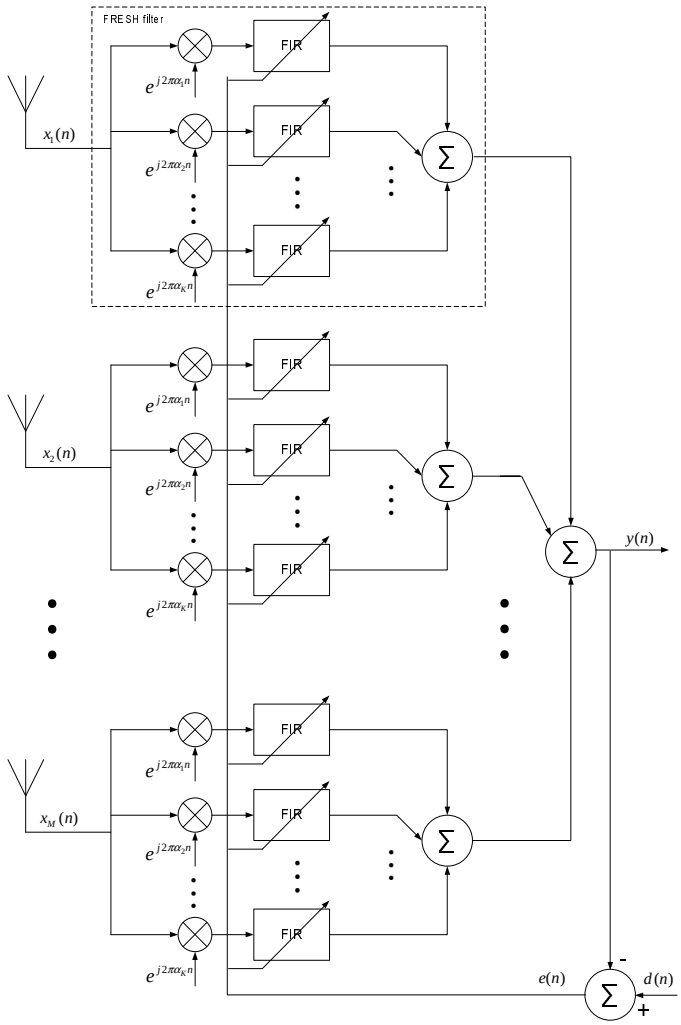

Fig. 1. Structure of the proposed cyclic STAP.

$\otimes$	convolution operation,
$\dagger$	matrix or vector Hermitian operation,
$\{\alpha_k\}_{k=1}^K$	K cycle frequencies used in FRESH filters, chosen according to the cyclostationary statistics of both the desired and interfering signals [2],
$\hbar_{mk}(n)$	impulse response of the N-tap FIR filter, associated with the k-th cycle frequency and the m-th antenna element,
$\mathbf{h}_{mk}$	$N \times 1$ coefficient vector of the filter $\hbar_{mk}(n)$, defined as $\mathbf{h}_{mk} = [h_{mk}(1)\ h_{mk}(2)\ \ldots\ h_{mk}(N-1)]^\intercal$,
$\mathbf{x}_{mk}(n)$	$N \times 1$ frequency-shifted input signal vector, defined as $\mathbf{x}_{mk}(n) = [x_m(n-N+1)e^{j2\pi\alpha_k(n-N+1)}\ \ldots\ x_m(n)e^{j2\pi\alpha_k n}]^\intercal$,
$\mathbf{h}_m$	$KN \times 1$ coefficient vector $[\mathbf{h}_{m1}^\intercal\ \mathbf{h}_{m2}^\intercal\ \ldots\ \mathbf{h}_{mK}^\intercal]^\intercal$,
$\mathbf{x}_m(n)$	$KN \times 1$ frequency-shifted input signal vector $[\mathbf{x}_{m1}(n)^\intercal\ \mathbf{x}_{m2}(n)^\intercal\ \ldots\ \mathbf{x}_{mK}(n)^\intercal]^\intercal$.

Eq. (2) can be represented in a more compact form

$$y(n) = \mathbf{h}^\dagger \mathbf{x}(n), \tag{3}$$

where $\mathbf{h}$ and $\mathbf{x}(n)$ are $KMN \times 1$ vectors, defined as

$$\mathbf{h} = [\mathbf{h}_1^\intercal\ \mathbf{h}_2^\intercal\ \ldots\ \mathbf{h}_M^\intercal]^\intercal, \tag{4}$$

and

$$\mathbf{x}(n) = [\mathbf{x}_1(n)^\intercal\ \mathbf{x}_2(n)^\intercal\ \ldots\ \mathbf{x}_M(n)^\intercal]^\intercal, \tag{5}$$

respectively.

To determine $\mathbf{h}$ in (4) for optimal interference cancellation, first we consider the training-based approach. Here a copy of the desired signal $s(n)$ is available, known as the training or reference signal $d(n)$. Similar to the single-antenna optimal FRESH filter [2], the goal is to adjust the cyclic STAP coefficient vector $\mathbf{h}$, by minimizing the mean-square error (MSE) between the reference signal $d(n)$ and the output $y(n)$. The error signal $e(n)$ is then given by

$$e(n) = d(n) - y(n) = s(n) - y(n). \tag{6}$$

It is straightforward to show that the optimal solution for the cyclic STAP that minimizes the cost function $J(\mathbf{h}) = E\{|e(n)|^2\} = \sigma_d^2 - 2\mathbf{h}^\dagger\mathbf{r} + \mathbf{h}^\dagger\mathbf{R}\mathbf{h}$ is

$$\mathbf{h}_{opt}^{TA} = \mathbf{R}^{-1}\mathbf{r}, \tag{7}$$

where $\sigma_d^2 = E\{|d(n)|^2\}$, $\mathbf{R} = \mathbb{E}[\mathbf{x}(n)\mathbf{x}^\dagger(n)]$, and $\mathbf{r} = \mathbb{E}[\mathbf{x}(n)d^*(n)]$.

On the other hand, one of the attractive feature of the FRESH filter is that it can be used as a blind adaptive algorithm [8], where the reference signal can be chosen such that $d(n) = x_m(n)e^{j2\pi\alpha_0 n}$, where α_0 is a cycle frequency of $s(n)$. Different from the training-based method, we propose the cost function for the blind approach to be the normalized correlation between $d(n)$ and $y(n)$

$$J(\mathbf{h}) = \frac{|R_{yd}|^2}{|R_{yy}||R_{dd}|}, \tag{8}$$

where $R_{uv} = E[u(n)v^*(n)]$. This is similar to the single-antenna BA-FRESH filter of [8]. The optimal $\mathbf{h}$ can be found by maximizing (8), since if the filter output $y(n)$ is a good extraction of the desired signal $s(n)$ from $x(n)$, $y(n)$ must have high correlation with the α_0-shifted version of $s(n)$ and the low correlation with α_0-shifted versions of undesired signals $i(n)$ and $w(n)$. Note that in using this criteria, we have to make sure that $\alpha_0 \neq \alpha_k\ \forall k$. Substituting (3) into (8) and using the Cauchy-Schwarz inequality, one has

$$J(\mathbf{h}) = \frac{|\mathbf{h}^\dagger\mathbf{R}^{1/2}\mathbf{R}^{-1/2}\mathbf{r}|^2}{|\mathbf{h}^\dagger\mathbf{R}\mathbf{h}|\sigma_d^2} \leq \frac{|\mathbf{h}^\dagger\mathbf{R}^{1/2}|^2|\mathbf{R}^{-1/2}\mathbf{r}|^2}{|\mathbf{h}^\dagger\mathbf{R}\mathbf{h}|\sigma_d^2}. \tag{9}$$

Consequently, the optimal solution for the blind cyclic STAP is

$$\mathbf{h}_{opt}^{BA} = \mathbf{R}^{-1}\mathbf{r}. \tag{10}$$

Interestingly, this optimal blind solution entails the same form as the trained-based solution in (7). This indicates that both the blind and training-based methods follow the same structure as the one shown in Fig. 1. However, the criteria for choosing the cycle frequencies might be different. Any combinations of cycle frequencies of both desired signal and interfering signal

can be utilized in the training-based approach [2], while there are some restrictions on the selection of cycle frequencies in the blind method.

III. Reduced-Rank Cyclic STAP

The conventional approach to implement the filter given in (7) or (10) is to use the estimates of $\mathbf{R}$ and $\mathbf{r}$, i.e., $\hat{\mathbf{R}}$ and $\hat{\mathbf{r}}$, over Q finite number of temporal samples at each antenna, i.e.,

$$\hat{\mathbf{h}}_{SMI} = \hat{\mathbf{R}}^{-1}\hat{\mathbf{r}}, \tag{11}$$

where

$$\hat{\mathbf{R}} = \frac{1}{Q}\sum_{n=1}^{Q}\mathbf{x}(n)\mathbf{x}^{\dagger}(n), \tag{12}$$

and

$$\hat{\mathbf{r}} = \frac{1}{Q}\sum_{n=1}^{Q}\mathbf{x}(n)d^{*}(n). \tag{13}$$

Eq. (11) is called the sample matrix inversion (SMI) solution. Note that as $Q \to \infty$, $\hat{\mathbf{h}}_{SMI}$ converges to optimal solution $\mathbf{h}_{opt}$ [6].

The SMI method is a full rank technique, where the inversion of the large $KNM \times KNM$ matrix $\hat{R}$ is required. The computational complexity of this inversion can be very high. Numerical instabilities and significant error may also appear in calculating the optimal weight vector, specially when the number of snapshots is small. All these can be avoided by working in a lower dimensional subspace. There are three major rank reduction approaches: principal component (PC) [3] [4], cross-spectral metric (CS) [4] and the multistage Wiener filter (MSWF) [5].

A. Principal Component (PC)

The idea of principal component is to project the original observed signal $\mathbf{x}(n)$ onto the subspace spanned by the desired signal with $D < KNM$ largest energies (D principal components). More specifically, the KMN dimensional covariance matrix can be spectrally decomposed as

$$\mathbf{R} = \mathbf{U}^{\dagger}\Lambda\mathbf{U}, \tag{14}$$

where $\mathbf{U}$ is a unitary $KMN \times KMN$ matrix composed of the eigenvectors $\{\nu_i\}_{i=1}^{KMN}$ and Λ is a diagonal matrix of the associated eigenvalues $\{\lambda_i\}_{i=1}^{KMN}$. This method selects the D eigenvectors that correspond to the D largest eigenvalues, to form the D-dimensional eigen-subspace in which the adaptive processor operates. Consequently, the new filter coefficients can be expressed as [4]

$$\mathbf{h}_{PC} = \mathbf{\Lambda}_D^{-1}\mathbf{U}_D^{\dagger}\mathbf{r}, \tag{15}$$

and the minimum MSE (MMSE) is

$$MMSE = \sigma_d^2 - \mathbf{r}^{\dagger}\mathbf{U}_D\mathbf{\Lambda}_D^{-1}\mathbf{U}_D^{\dagger}\mathbf{r}. \tag{16}$$

Note that $\mathbf{U}_D$ is composed of the D eigenvectors and the diagonal matrix $\mathbf{\Lambda}_D$ includes the D largest eigenvalues. The advantage of this eigen-decomposition based rank reduction method is that it avoids the large-dimension matrix inversion. So, the computational load is decreased, specially when $D \ll KMN$.

TABLE I

The Space-time MSWF algorithm

Forward Recursion	Backward Recursion
$\mathbf{r}_{\breve{x}_l d_l} = E[\breve{\mathbf{x}}_l(n)d_l^*(n)]$	$w_l = \delta_l/\xi_l$
$\delta_{l+1} = \left\|\mathbf{r}_{\breve{x}_l d_l}\right\|$	$\varepsilon_{l-1}(n) = d_{l-1}(n) - w_l\varepsilon_l(n)$
$\mathbf{p}_{l+1} = \mathbf{r}_{\breve{x}_l d_l}/\delta_{l+1}$	$\xi_{l-1} = E[\lvert\varepsilon_{l-1}\rvert^2]$
$\mathbf{B}_{l+1} = null(\mathbf{p}_{l+1})$	$= \sigma_{d_{l-1}}^2 - \delta_l^2/\xi_l$
$d_{l+1}(n) = \mathbf{p}_{l+1}^{\dagger}\breve{\mathbf{x}}_l(n)$	
$\sigma_{d_l}^2 = E[\lvert d_l(n)\rvert^2]$	
$\breve{\mathbf{x}}_{l+1}(n) = \mathbf{B}_{l+1}\breve{\mathbf{x}}_l(n)$	

B. Cross-Spectral Metric (CS)

By the spectral decomposition of $\mathbf{R}$, the full rank optimal solution in (7) or (10) can be rewritten as [4]

$$MMSE = \sigma_d^2 - \sum_{i=1}^{KMN}\frac{\left|\nu_i^{\dagger}\mathbf{r}\right|^2}{\lambda_i}. \tag{17}$$

Instead of selecting the D largest eigenvalues in the PC method, the cross-spectral metric chooses the D eigenvectors which correspond to the D largest terms $(1/\lambda_i)\left|\nu_i^{\dagger}\mathbf{r}\right|^2$ in (17). The filter coefficients $\mathbf{h}_{CS}$ follow the same form as (15), where $\mathbf{\Lambda}_D$ and $\mathbf{U}_D$ are constructed as just described.

Note that both PC and CS techniques need to calculate the eigenvalues and eigenvectors of $\mathbf{R}$, which still can be computationally intensive.

C. Multistage Wiener Filter (MSWF)

The multistage Wiener filter [5] provides a stage-by-stage decomposition of the Wiener filter solution, as shown in Fig. 2, where the decomposition is stopped at the stage $D = 3$. Note that $\|(.)\|$ denotes the determinant operator. At each stage, a scalar weight is computed which weighs the contribution of that stage, to suppress the interference. Each stage works to remove the residual interference that has survived in all the previous stages. The essential difference between MSWF and PC or CS is that MSWF utilizes the information in both $\mathbf{R}$ and $\mathbf{r}$, instead of $\mathbf{R}$ alone, when constructing a reduced dimensional subspace. The reduced-dimension subspace for MSWF is spanned by

$$\mathbf{U}_D = \left[\begin{array}{cccc}\mathbf{p}_1 & \mathbf{p}_2 & \cdots & \mathbf{p}_D\end{array}\right], \tag{18}$$

where the definition of each $\mathbf{p}$ vector is given in Fig. 2 and D is the rank. Table I illustrates the implementation of the space-time filter algorithm.

The advantage of MSWF for practical implementation is evident: it does not need the eigen-decomposition or the inversion of $\mathbf{R}$. Moreover, the MSWF even does not need to estimate the covariance matrix $\mathbf{R}$. These properties make MSWF a useful candidate for reduced rank cyclic STAP.

A summary of the computational complexity of SMI, PC, CS, and MSWF is provided in Table II.

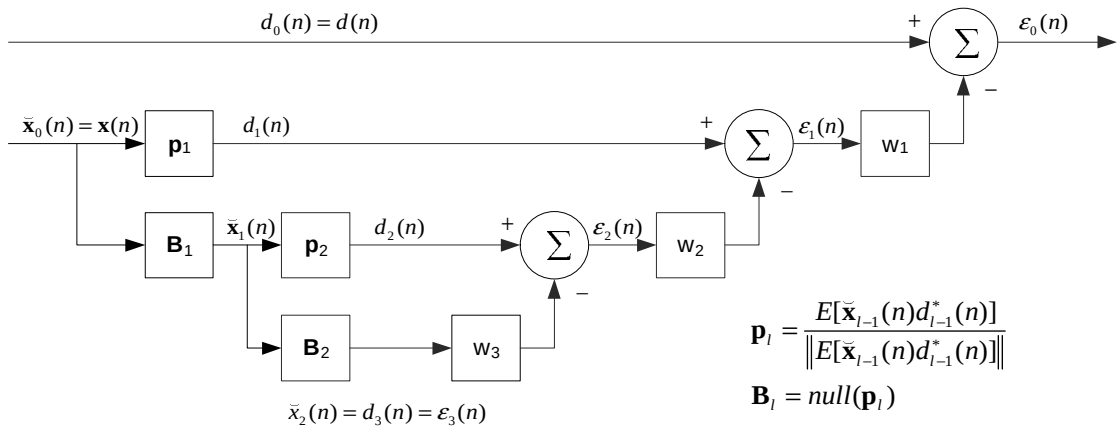

Fig. 2. MSWF decomposition for a 3-stage cyclic STAP.

TABLE II
COMPUTATIONAL COMPLEXITY COMPARISON

	SMI	PC	CS	MSWF
Cov. Matrix Estimation	Yes	Yes	Yes	No
Cov. Matrix Inversion	Yes	No	No	No
Cov. Matrix Eigen-Decomposition	No	Yes	Yes	No

TABLE III
INTERFERING SCENARIOS

Signal	**Scenario #1** (ϕ, θ)	**Scenario #2** (ϕ, θ)
$s(n)$	$(55°, 90°)$	$(55°, 90°)$
$i(n)$	$(0°, 90°)$	$(55°, 90°)$

IV. SIMULATION RESULTS

In this section, we first evaluate the performance of the proposed training-based multi-antenna FRESH filter using Monte Carlo simulation and compare it with the traditional STAP. The performance of the blind algorithm is also investigated. Then we present the performance of the reduced-rank cyclic STAP, implemented with PC, CS, and MSWF.

A. Simulation Setup and Parameters

In our simulations, a uniform linear array is considered. In particular, we consider $M = 2$ elements to reduce the simulation time. Both desired and interfering signals are BPSK signals, given by

$$s(nT_s) = \sum_{q=-\infty}^{\infty} \chi_q g(nT_s - qT_{b_1}) \cos(2\pi f_1 nT_s), \qquad (19)$$

and

$$i(nT_s) = \sum_{q=-\infty}^{\infty} \rho_q g(nT_s - qT_{b_2}) \cos(2\pi f_2 nT_s), \qquad (20)$$

respectively. In (19) and (20) $\{\chi_q\}$ and $\{\rho_q\}$ are zero-mean stationary binary random sequences with powers $\sigma_\chi^2 = 1$ and σ_ρ^2, respectively, T_s denotes the sampling period, $g(t)$ is the pulse shaping filter, T_{b_1} and T_{b_2} represents the symbol periods, and f_1 and f_2 are the carrier frequencies of $s(t)$ and $i(t)$, respectively.

In all the simulations, we assume $g(t)$ is a raised cosine filter with rolloff factor 1 [9], the desired and interfering signals have the same baud rate of 2 kHz, and the carrier frequency of the desired signal f_1 is 10 kHz, which is spectrally overlapped with the interfering signal, having carrier frequency $f_2 = 8$ kHz. The signal to noise ratio (SNR) is defined by σ_s^2/σ_w^2 per element and is fixed at 5 dB. Similarly, the signal to inference ratio (SIR) is denoted by σ_s^2/σ_i^2. Also, the cycle frequencies used in the training-based algorithm are chosen as $\alpha_1 = 20$ kHz, $\alpha_2 = 0$ kHz and $\alpha_3 = -20$ kHz [1]. According to Theorem 1 in [8], the cycle frequencies used for the blind method are $\alpha_1 = 20$ kHz and $\alpha_2 = -20$ kHz, and the frequency shift used in the reference signal $d(n)$ is $\alpha_0 = 0$ kHz. Moreover, two interfering scenarios are considered to illustrate the performance of the proposed cyclic STAP. As shown in Table III, we assume two-dimensional propagation, $\theta = 90°$, such that the desired signal comes from a fixed azimuthal location $\phi = 55°$. In the first scenario, which is a good scenario for the desired signal, the angular location of the interfering signal is $\phi = 0°$, which is far from the desired signal. The second scenario contains an interfering signal which is exactly aligned with the desired signal, i.e., $\phi = 55°$. The FIR filter length on each antenna is $N = 16$ for both cyclic STAP and conventional STAP. Note that the receiver noise is Gaussian and spatio-temporally white. $Q = 2000$ snapshots are used to calculate the filter coefficients in all the simulations. The performance of both the training-based and blind cyclic STAP is evaluated using the MSE between the filter output $y(n)$ and desired signal $s(n)$, estimated by $\sum_{n=1}^{1000} \{|y(n) - s(n)|^2\}$.

B. The Full Rank Cyclic STAP

Fig. 3 shows the performance of the cyclic STAP for the interfering scenario #1, with respect to SIR. When the training

[1]According to Gardner's optimal FRESH filtering theory, the frequency shifts used should include all combinations of the cycle frequencies of both desired and interfering signals. However, considering the computation load and the strengths of the cycle frequencies, we have chosen these frequencies.

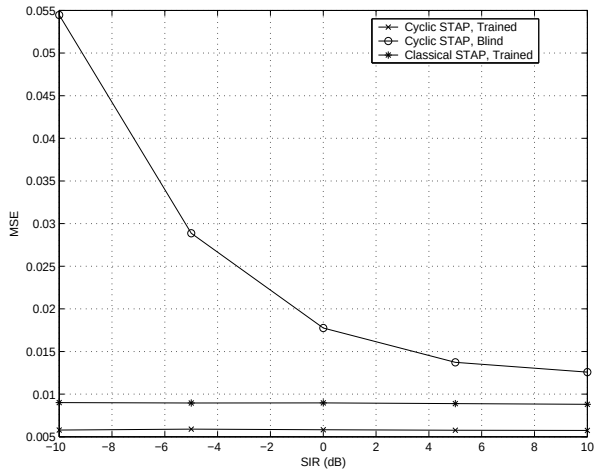

Fig. 3. MSE versus SIR, scenario #1.

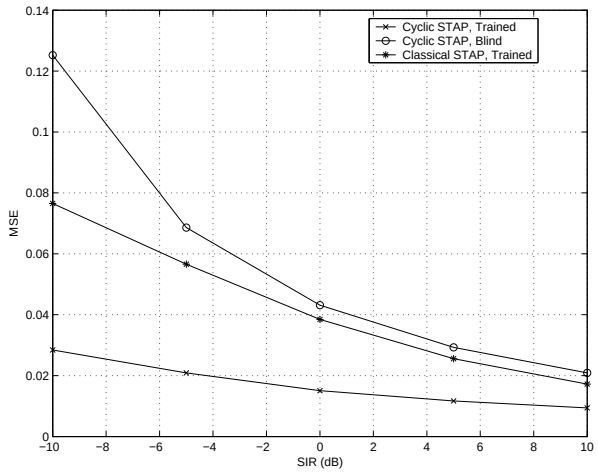

Fig. 4. MSE versus SIR, scenario #2.

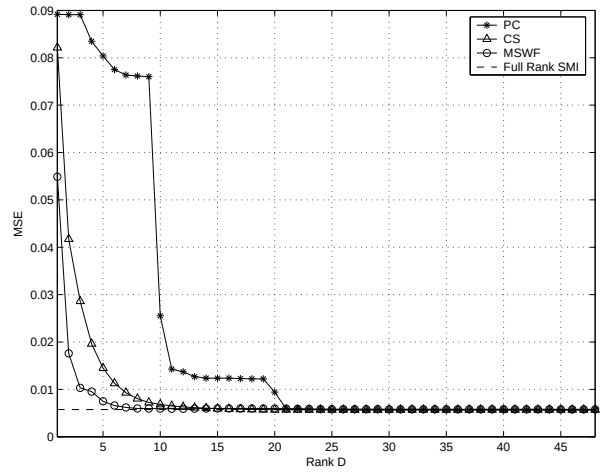

Fig. 5. MSE versus rank, cyclic STAP, scenario #1.

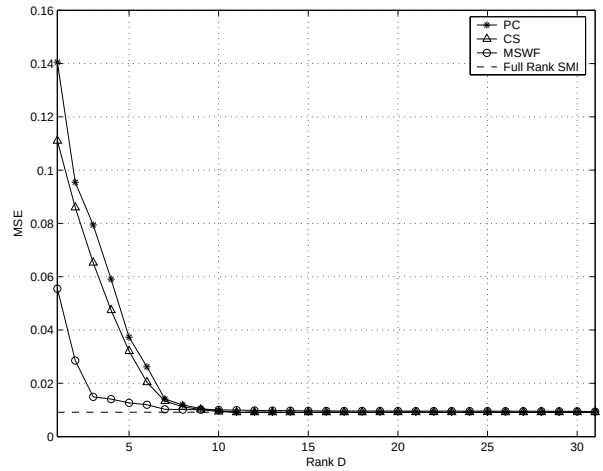

Fig. 6. MSE versus rank, classical STAP, scenario #1.

signal is available, it shows that almost 2 dB performance improvement is achieved, compared with the conventional STAP. Both the training-based cyclic STAP and conventional STAP are not sensitive to SIR, since the desired and interfering signals are spatially well separated, so the spatial part of both STAPs easily cancels the interference. On the other hand, the performance of the blind cyclic STAP improves monotonically with SIR, as the blind method relies on the temporal characteristics of the desired signal. For moderate SIRs, the blind cyclic STAP is able to provide acceptable performance. Next we study the cyclic STAP performance for interfering scenario #2, where the desired signal is completely blocked in space by the interfering signal. This is a challenging situation for the conventional STAP. As demonstrated in Fig. 4, in this case, the trained cyclic STAP outperforms the classical STAP significantly, especially when the desired signal is much weaker than the interfering signal. Moreover, the performance of the blind cyclic STAP approaches the training-based traditional STAP, as SIR increases.

C. The Reduced Rank Cyclic STAP

Now we evaluate the performance of the reduced-rank cyclic STAP. Without loss of generality, the training based cyclic STAP and the traditional STAP are considered only for the interfering scenario #1. The SIR is fixed at 5 dB. The rank-reduction effectiveness of the three reduced-rank techniques PC, CS, and MSWF, applied to the cyclic STAP, is depicted in Fig. 5. Here MSWF shows a better performance in terms of rank reduction. The MSE of MSWF reaches the optimal solution (full rank SMI when Q is large enough) solution at around the 7th stage, while PC and CS need higher ranks. For comparison, we also show the performance of the reduced rank conventional STAP in Fig. 6. As one can see in Fig. 5 and Fig. 6, the rank of the cyclic STAP is larger than that of the traditional STAP. So, PC and CS need to pick up more eigenvalues, to reach the optimal solutions. However, in this example, this is not necessarily true for MSWF, as both the cyclic STAP and classical STAP reach the optimal full rank solutions approximately at rank 7, as illustrated in Fig. 5 and Fig. 6. This indicates that there is no significant increase in

the computational load of the cyclic STAP, when the MSWF reduced-rank technique is utilized.

V. Conclusion

In this paper we have proposed a time-dependent adaptive array structure for interference suppression. The new structure exploits the cyclostationarity of the received signal, as well as the classical space-time adaptive processing (STAP) concept. In comparison with the conventional STAP, some significant performance gain can be achieved, especially in interference scenarios where the interference is spatially aligned with the desired signal. Another important benefit of the proposed cyclic STAP is that it can be implemented blindly, which is of interest in both commercial and military applications. By using the multistage Wiener filtering rank reduction technique, the computational complexity of the proposed cyclic STAP can be significantly reduced, as demonstrated in the paper.

References

[1] W. A. Gardner, *Introduction to Random Processes: With Applications to Signals and Systems*, 2nd ed. New York: McGraw-Hill, 1990.

[2] ——, "Cyclic Wiener filtering: Theory and method," *IEEE Trans. Commun.*, vol. 41, pp. 151–163, 1993.

[3] A. Haimovich and Y. Bar-Ness, "An eigenanalysis interference canceler," *IEEE Trans. Signal Processing*, vol. 39, pp. 76–84, 1991.

[4] J. S. Goldstein and I. S. Reed, "Subspace selection for partially adaptive sensor array processing," *IEEE Trans. Aerosp. Electron. Syst.*, vol. 33, pp. 539–543, 1997.

[5] J. S. Goldstein, I. S. Reed, and L. L. Scharf, "A mulistage representation of the Wiener filter based on orthogonal projections," *IEEE Trans. Inform. Theory*, vol. 44, pp. 2943–2959, 1998.

[6] J. R. Guerci, *Space-Time Adaptive Processing for Radar*. Boston, MA: Artech House, 2002.

[7] W. L. Melvin, "A STAP overview," *IEEE Aerosp. Electron. Syst. Mag.*, vol. 19, pp. 19–35, 2004.

[8] J. Zhang, K. M. Wong, and P. C. Ching, "Blind adaptive FRESH filtering for signal extraction," *IEEE Trans. Signal Processing*, vol. 47, pp. 1397–1402, 1999.

[9] J. G. Proakis, *Digital Communications*, 4th ed. New York: McGraw-Hill, 2001.