SPACE-TIME CORRELATION MODELING OF MULTIELEMENT ANTENNA SYSTEMS IN MOBILE FADING CHANNELS

A. Abdi, M. Kaveh

Dept. of Elec. and Comp. Eng., University of Minnesota
Minneapolis, Minnesota 55455, USA

ABSTRACT

For the analysis and design of multielement antenna systems in mobile fading channels, we need a model for the space-time cross correlation among the links of the multiple-input multiple-output (MIMO) channel. In this paper we propose a general space-time cross correlation function for narrowband Rayleigh fading MIMO channels, where various parameters of interest such as angle spreads at the base station and the user, the distance between the base station and the user, mean directions of the signal arrivals, array configurations, and Doppler spread are all taken into account. The new space-time cross correlation function includes all the relevant parameters of the MIMO narrowband Rayleigh fading channel in a clean compact form, suitable for both simulation and mathematical analysis. It also covers many known correlation models as special cases. We demonstrate the utility of the new space-time correlation model by clarifying the limitations of a widely-accepted correlation model for MIMO fading channels.

1. INTRODUCTION

In recent years the application of antenna arrays for wireless cellular systems has received much attention [1], as they improve the coverage and quality of such systems by combating interference and fading. It has also been shown that by exploiting antenna arrays at both transmitters and the receivers, the Shannon capacity of wireless channels can be increased significantly [2]. Efficient joint use of time- and space-domain data using multielement antennas requires space-time channel models.

According to the wireless connection scheme between a base station (BS) and a user, depicted in Fig. 1, the BS which is not surrounded by local scatterers, receives the signal only from a particular direction through a narrow beamwidth. On the other hand, the local scatterers around the user may give rise to different mode of signal propagation towards the user. In the general scenario of non-isotropic scattering, which corresponds to the directional signal reception, the user receives the signal only from particular directions (see Fig. 2). The special case of isotropic scattering is shown in Fig. 3, where the user receives signals from all directions with equal probabilities. The isotropic scattering model, also known as the Clarke's model, corresponds to the uniform distribution for the angle of arrival (AOA). However, empirical measurements at different frequencies and different environments such as indoor channels [3] and urban channels [4] have shown that the AOA distribution of waves impinging the user is more likely to be non-uniform. The non-uniform distribution of the AOA can significantly affect the performance of array based techniques, as the AOA statistics determines the cross correlation among the array elements. Examples regarding the impact of the AOA on the asymptotic efficiency of a decision-directed and a decorrelating multiuser-array detector with imperfect channel estimates, and the bit error rate of a maximal ratio combiner (MRC) are discussed in [5].

It is shown in [5] that the von Mises angular distribution serves as a good model for the AOA. For the wireless connection scenarios between the BS and the user considered in [5], which are special cases of the general scheme depicted in Fig. 1, the von Mises distribution has resulted in an easy-to-use and closed-form expression for the space-time correlation function. Empirical justifications for the von Mises-based correlation model are also provided in [5].

In what follows, we derive a closed-form, easy-to-use, and mathematically tractable parametric expression for the space-time cross correlation between the links of a multiple-input multiple-output (MIMO) Rayleigh wireless fading channel with multielement antennas at both sides of the channel, where non-isotropic scattering around the user is modeled by the von Mises distribution. The effect of the mobility of the user (the Doppler spread) is also considered.

There are numerous applications of the proposed correlation model in multielement antenna systems with space-time modems, such as the joint selection of antenna spacing and interleaving depth [6], channel interpolation using the Wiener filter [7], calculation of Shannon capacity [8] [9] [10] [11] [12], optimum combining to suppress the interferers and combat the fading of the desired user [13], and so forth. In this paper we only focus on modeling issues.

2. THE MIMO NARROWBAND CHANNEL

Consider the multielement antenna system shown in Fig. 1, where the BS and the user have n_{BS} and n_U antenna elements, respectively. Obviously in Fig. 1 we have uniform linear arrays with $n_{BS} = n_U = 2$ (a 2×2 MIMO channel), which constitutes the basic configuration of multielement antenna systems with arbitrary array configurations. The BS receives the signal through the narrow beam width Δ, while the user receives the signal from a large number of surrounding local scatterers, impinging the user from different directions. The *i*th scatterer is represented by S_i, D is the distance between the BS and the user, and R is the radius of the ring of scatterers. Clearly, Δ, R, and D are related through $\tan(\Delta) = R/D$.

Let us consider the downlink, as similar capacity results hold for the uplink. Let $s_p(t)$ represent the complex envelope of the signal transmitted from the *p*th BS array element and $r_l(t)$ the complex envelope of the signal received by the *l*th user's array element. Then the impulse response complex envelope $h_{lp}(t)$ can be defined for the communication link between the element BS_p and the element U_l. Note that such a *link* comprises of many *paths* that can be drawn from BS_p to U_l through the ring of local scatterers enclosing the user. Based on the vector notations $\boldsymbol{s}(t) = [s_1(t) \ldots s_{n_{BS}}(t)]'$ and $\boldsymbol{r}(t) = [r_1(t) \ldots r_{n_U}(t)]'$,

with $.'$ as the transpose operator, the input-output equation for the MIMO channel can be written as

$$\boldsymbol{r}(t) = \boldsymbol{H}(t) \oplus \boldsymbol{s}(t) + \boldsymbol{n}(t), \quad (1)$$

where $\boldsymbol{H}(t)$ is the $n_U \times n_{BS}$ channel matrix complex envelope such that $[\boldsymbol{H}(t)]_{lp} = h_{lp}(t)$, $\oplus$ denotes convolution, and $\boldsymbol{n}(t)$ stands for the complex envelope of the additive white Gaussian noise with zero mean vector and the identity covariance matrix, i.e. $E[\boldsymbol{n}(t)\boldsymbol{n}^T(t)] = \boldsymbol{I}$, where $\boldsymbol{I}$ is the real identity matrix. Note that ^{T} is the transpose conjugate operator. To simplify the notation, we assume that all the $n_U n_{BS}$ links have equal unit power, i.e., $E[|h_{lp}(t)|^2] = 1$. Based on Fig. 1, the normalized impulse response complex envelope $h_{lp}(t)$ can be written as

$$h_{lp}(t) = \lim_{N\to\infty} N^{-1/2} \sum_{i=1}^{N} g_i$$
$$\exp\left\{ j\psi_{lip} - \frac{j2\pi}{\lambda}(\xi_{ip} + \xi_{li}) + j2\pi f_D[\cos(\phi_i^U - \gamma)]t \right\}, \quad (2)$$

where N is the number of independent scatterers S_i around the user, g_i represents the amplitude of the wave scattered by the ith scatterer towards the user, ψ_{lip} denotes the phase of the wave scattered by the ith scatterer from BS_p to U_l, ξ_{ip} and ξ_{li} are the distances shown in Fig. 1, λ is the wavelength, $j^2 = -1$, $f_D = v/\lambda$ is the maximum Doppler shift, γ and v stand for the direction of the user motion and its speed, respectively, and finally ϕ_i^U is the AOA of the wave traveling from the ith scatterer to the user. The set $\{g_i\}_{i=1}^{\infty}$ consists of independent positive random variables, independent of $\{\psi_{lip}\}_{i=1}^{\infty}$. It is reasonable to assume that $\{\psi_{lip}\}_{i=1}^{\infty}$ are independent and identically distributed (iid) random variables with uniform distributions over $[0, 2\pi)$.

Notice that based on the statistical properties of the channel described above, central limit theorem implies that $h_{lp}(t)$ in (2) is a lowpass zero-mean complex Gaussian process. Hence, the envelope $|h_{lp}(t)|$ is a Rayleigh process. In other words, our model represents a narrowband Rayleigh fading channel.

3. THE NEW SPACE-TIME CORRELATION

Based on the statistical properties of $\{g_i\}_{i=1}^{\infty}$ and $\{\psi_{lip}\}_{i=1}^{\infty}$ discussed in the previous section, it is easy to derive the following expression for the space-time cross correlation between the impulse responses of two arbitrary communication links $h_{lp}(t)$ and $h_{mq}(t)$

$$\rho_{lp,mq}(\tau) = E[h_{lp}(t)h_{mq}^*(t+\tau)] = \lim_{N\to\infty} N^{-1} \sum_{i=1}^{N} E[g_i^2]$$
$$\exp\left\{ \frac{-j2\pi}{\lambda}[(\xi_{ip} - \xi_{iq}) + (\xi_{li} - \xi_{mi})] - j2\pi f_D[\cos(\phi_i^U - \gamma)]\tau \right\}, \quad (3)$$

where * is the complex conjugate. Note that the condition $E[|h_{lp}(t)|^2] = 1$ corresponds to $N^{-1}\sum_{i=1}^{N} E[g_i^2] = 1$ as $N \to \infty$. For many real-world scenarios in which Δ is very small [14] and $D >> R >> \max(\delta_{pq}, d_{lm})$, it is straightforward to show

$$\xi_{ip} - \xi_{iq} \approx -\delta_{pq}[\cos(\alpha_{pq}) + \Delta\sin(\alpha_{pq})\sin(\pi - \phi_i^U)], \quad (4)$$

$$\xi_{li} - \xi_{mi} \approx d_{lm}\cos[\pi - (\phi_i^U - \beta_{lm})]. \quad (5)$$

For large N, the small fraction of the total unit power (recall $E[|h_{lp}(t)|^2] = 1$) scattered by the ith scatterer towards the user is $E[g_i^2]/N$, which is equal to the infinitesimal power coming from differential angle $d\phi^U$ with probability $f(\phi_i^U)$, i.e., $E[g_i^2]/N = f(\phi_i^U)d\phi^U$ [15], where $f(\phi^U)$ is the probability density function (PDF) of the AOA seen by the user. Therefore, Eq. (3) can be written in the following integral form

$$\rho_{lp,mq}(\tau) = \int_0^{2\pi} \exp\left\{ \frac{j2\pi}{\lambda}[\delta_{pq}\Delta\sin(\alpha_{pq})\sin(\phi^U) + d_{lm}\cos(\phi^U - \beta_{lm})] \right.$$
$$\left. - j2\pi f_D[\cos(\phi^U - \gamma)]\tau \right\} f(\phi^U)d\phi^U \times \exp\left\{ \frac{j2\pi\delta_{pq}\cos(\alpha_{pq})}{\lambda} \right\}. \quad (6)$$

The cross correlation expression given in (6) holds for any angular PDF $f(\phi^U)$. Here we employ the von Mises PDF, defined by

$$f(\phi^U) = \frac{\exp[\kappa\cos(\phi^U - \mu)]}{2\pi I_0(\kappa)}, \quad \phi^U \in [-\pi, \pi), \quad (7)$$

where $I_0(.)$ is the zero-order modified Bessel function, $\mu \in [-\pi, \pi)$ accounts for the mean direction of AOA seen by the user, and $\kappa \geq 0$ controls the width of AOA [5]. For $\kappa = 0$ (isotropic scattering) we have $f(\phi^U) = 1/(2\pi)$, while for $\kappa = \infty$ (extremely non-isotropic scattering) the von Mises PDF becomes a Dirac delta function concentrated at $\phi^U = \mu$. For the empirical justifications of the von Mises PDF for the AOA, the reader may refer to [5] and references therein. Several applications are also discussed in [16] and [17], which show how the von Mises PDF results in simple mathematically-tractable formulas for the AOA-related channel parameters, that significantly facilitate system analysis and design.

To simplify the notation, let us define the normalized quantities $a = 2\pi f_D\tau$, $b_{lm} = 2\pi d_{lm}/\lambda$, and $c_{pq} = 2\pi\delta_{pq}/\lambda$. By inserting (7) into (6), calculating the integral using [18], and after some algebric manipulations, we obtain the following key result

$$\rho_{lp,mq}(\tau) = \frac{\exp(jc_{pq}\cos\alpha_{pq})}{I_0(\kappa)} I_0\left(\left\{ \kappa^2 - a^2 - b_{lm}^2 - c_{pq}^2\Delta^2\sin^2\alpha_{pq} \right.\right.$$
$$+ 2ab_{lm}\cos(\beta_{lm} - \gamma) + 2c_{pq}\Delta\sin\alpha_{pq}(a\sin\gamma - b_{lm}\sin\beta_{lm})$$
$$\left.\left. - j2\kappa[a\cos(\mu - \gamma) - b_{lm}\cos(\mu - \beta_{lm}) - c_{pq}\Delta\sin\alpha_{pq}\sin\mu] \right\}^{1/2}\right). \quad (8)$$

Notice how the proposed space-time cross correlation function includes all the parameters of the MIMO fading channel with multielement antennas in a closed form, suitable for both mathematical analysis and numerical calculations. The compact form of (8) provides computational advantages over the simulation-based correlation models [19]. The simplest special case of (8) is the Clarke's correlation model $J_0(2\pi f_D\tau)$ [15], where $J_0(.)$ is the zero-order Bessel function. Eq. (8) can also be considered as a generalization of the models proposed in [5] [6] [8] [20] [21].

4. SEPARATE VERSUS JOINT MODELING

The cross correlation function given in (8) includes the parameters of the BS and the user's arrays, jointly. However, either for mathematical convenience [8] [9] [10] [11] [12] or to have a simple simulation framework based on measurements [22] [23], it is common to model the cross correlation among the elements of the BS and the user's arrays, separately. The cross correlation among the MIMO channel links then can be obtained, approximately, by a simple multiplication

$$E[h_{lp}(t)h_{mq}^*(t+\tau)] \approx E[h_{ls}(t)h_{ms}^*(t+\tau)]E[h_{rp}(t)h_{rq}^*(t+\tau)]. \quad (9)$$

Note that $E[h_{ls}(t)h_{ms}^*(t+\tau)]$ is the cross correlation between the *l*th and the *m*th elements of the user's array, independent of the BS element index *s*. Likewise, $E[h_{rp}(t)h_{rq}^*(t+\tau)]$ is the cross correlation between the *p*th and the *q*th elements of the BS array, independent of the user's element index *r*. The validity of the approximation in (9) has been studied in [12] using the experimentally-based WiSE ray-tracing simulator. Specifically, for a 2×2 channel with $f_D = 0$, they have observed close agreement between $\rho_{11,22}(0)$ and $\rho_{11,21}(0)\rho_{11,12}(0)$, over the range of antenna spacings that they considered.

Now we use the new cross correlation model in (8) to study the approximation in (9), analytically. For $n_{BS} = n_U = 2$, let $f_D = 0$ (fixed user), $\alpha_{12} = \beta_{12} = 90^{\circ}$ (parallel arrays), and $\mu = 180^{\circ}$. Then, based on (8) we obtain

$$\rho_{11,22}(0) = I_0\left(\left\{\kappa^2 - (b_{12} + c_{12}\Delta)^2\right\}^{1/2}\right)\Big/ I_0(\kappa), \tag{10}$$

$$\rho_{11,21}(0) = I_0\left(\left\{\kappa^2 - b_{12}^2\right\}^{1/2}\right)\Big/ I_0(\kappa), \tag{11}$$

$$\rho_{11,12}(0) = I_0\left(\left\{\kappa^2 - c_{12}^2\Delta^2\right\}^{1/2}\right)\Big/ I_0(\kappa). \tag{12}$$

Assuming $\Delta = 2^{\circ}$ [14], $|\rho_{11,22}(0) - \rho_{11,21}(0)\rho_{11,12}(0)|$ is plotted in Figs. 4 and 5 versus d_{12}/λ and δ_{12}/λ, for $\kappa = 3$ and $\kappa = 0$, respectively. Note that the angle spread for the user in Fig. 4 is $2/\sqrt{\kappa} \approx 66^{\circ}$ [5], around the mean AOA of 180°, while the user in Fig. 5 receives signal from all directions uniformly.

The noticeable fact is that as the antenna spacings increase, the error magnitude does not change monotonically, and there are local maxima in the two-dimensional error plots. Only for certain antenna spacings the error becomes zero. As expected, for very large spacings, the error is negligible. Notice the significant error of 0.51 at $d_{12}/\lambda = 0.25$ and $\delta_{12}/\lambda = 7.3$ for the isotropic scattering case in Fig. 5, which reduces to 0.34 at $d_{12}/\lambda = 0.28$ and $\delta_{12}/\lambda = 8.1$ in Fig. 4 for the non-isotropic scattering scenario. These observations provide some guidelines for the correct use of (9), which has widely been accepted for the analysis and simulation of correlated MIMO channels.

5. CONCLUSION

In this paper we have introduced a general and flexible cross correlation function between the links of a multiple-input multiple-output narrowband Rayleigh mobile channel. The model includes the essential physical parameters of the channel in a single closed-form expression, convenient for both mathematical analysis and simulation.

6. ACKNOWLEDGEMENT

This work has been supported in part by NSF, under the Wireless Initiative Program, Grant #9979443.

7. REFERENCES

[1] J. H. Winters, "Smart antennas for wireless systems," *IEEE Pers. Commun. Mag.*, vol. 5, no. 1, pp. 23-27, 1998.

[2] G. J. Foschini and M. J. Gans, "On limits of wireless communications in a fading environment when using multiple antennas," *Wireless Pers. Commun.*, vol. 6, pp. 311-335, 1998.

[3] S. Guerin, "Indoor wideband and narrowband propagation measurements around 60.5 GHz in an empty and furnished room," in *Proc. IEEE Vehic. Technol. Conf.*, Atlanta, GA, 1996, pp. 160-164.

[4] P. C. Fannin and A. Molina, "Analysis of mobile radio channel sounding measurements in inner city Dublin at 1.808 Ghz," *IEE Proc. Commun.*, vol. 143, pp. 311-316, 1996.

[5] A. Abdi and M. Kaveh, "A versatile spatio-temporal correlation function for mobile fading channels with non-isotropic scattering," in *Proc. IEEE Workshop Statistical Signal Array Processing*, Pocono Manor, PA, 2000, pp. 58-62.

[6] T. A. Chen, M. P. Fitz, W. Y. Kuo, M. D. Zoltowski, and J. H. Grimm, "A space-time model for frequency nonselective Rayleigh fading channels with applications to space-time modems," *IEEE J. Select Areas Commun.*, vol. 18, pp. 1175-1190, 2000.

[7] A. F. Naguib, V. Tarokh, N. Seshadri, and A. R. Calderbank, "A space-time coding modem for high-data-rate wireless communications," *IEEE J. Select Areas Commun.*, vol. 16, pp. 1459-1478, 1998.

[8] D. S. Shiu, G. J. Foschini, M. J. Gans, and J. M. Kahn, "Fading correlation and its effect on the capacity of multielement antenna systems," *IEEE Trans. Commun.*, vol. 48, pp. 502-513, 2000.

[9] A. M. Sengupta and P. P. Mitra, "Capacity of multivariate channels with multiplicative noise: I. Random matrix techniques and large-*N* expansions for full transfer matrices," Bell Labs., Tech. Rep., 2000.

[10] A. L. Moustakas, H. U. Baranger, L. Balents, A. M. Sengupta, and S. H. Simon, "Communication through a diffusive medium: Coherence and capacity," *Science*, vol. 287, pp. 287-290, 2000.

[11] D. Chizhik, F. R. Farrokhi, J. Ling, and A. Lozano, "Effect of antenna separation on the capacity of BLAST in correlated channels," to appear in *IEEE Commun. Lett.*, 2000.

[12] C. N. Chuah, J. M. Kahn, and D. Tse, "Capacity of multi-antenna array systems in indoor wireless environment," in *Proc. IEEE Global Telecommun. Conf.*, Sydney, Australia, 1998, pp. 1894-1899.

[13] J. Salz and J. H. Winters, "Effect of fading correlation on adaptive arrays in digital mobile radio," *IEEE Trans. Vehic. Technol.*, vol. 43, pp. 1049-1057, 1994.

[14] T. S. Chu and L. J. Greenstein, "A semi-empirical representation of antenna diversity gain at cellular and PCS base stations," *IEEE Trans. Commun.*, vol. 45, pp. 644-646, 1997.

[15] W. C. Jakes, Jr., "Multipath interference," in *Microwave Mobile Communications*. W. C. Jakes, Jr., Ed., New York: Wiley, 1974, pp. 11-78.

[16] C. Tepedelenlioglu, A. Abdi, G. Giannakis, and M. Kaveh, "Estimation of Doppler spread and signal strength in mobile communications with applications to handoff and adaptive transmission," to appear in *Wireless Systems and Mobile Computing*, 2000.

[17] A. Abdi, K. Wills, H. A. Barger, M. S. Alouini, and M. Kaveh, "Comparison of the level crossing rate and average fade duration of Rayleigh, Rice, and Nakagami fading models with mobile channel data," in *Proc. IEEE Vehic. Technol. Conf.*, Boston, MA, 2000, pp. 1850-1857.

[18] I. S. Gradshteyn and I. M. Ryzhik, *Table of Integrals, Series, and Products*, 5th ed., A. Jeffrey, Ed., San Diego, CA: Academic, 1994.

[19] M. Stege, J. Jelitto, M. Bronzel, and G. Fettweis, "A multiple input-multiple output channel model for simulation of TX- and RX-diversity wireless systems," in *Proc. IEEE Vehic. Technol. Conf.*, Boston, MA, 2000, pp. 833-839.

[20] W. C. Y. Lee, "Level crossing rates of an equal-gain predetection diversity combiner," *IEEE Trans. Commun. Technol.*, vol. 18, pp. 417-426, 1970.

[21] T. Fulghum and K. Molnar, "The Jakes fading model incorporating angular spread for a disk of scatterers," in *Proc. IEEE Vehic. Technol. Conf.*, Ottawa, ONT, Canada, 1998, pp. 489-493.

[22] K. I. Pedersen, J. B. Andersen, J. P. Kermoal, and P. Mogensen, "A stochastic multiple-input-multiple-output radio channel model for evaluation of space-time coding algorithms," in *Proc. IEEE Vehic. Technol. Conf.*, Boston, MA, 2000, pp. 893-897.

[23] L. Schumacher, K. I. Pedersen, J. P. Kermoal, and P. Mogensen, "A link-level MIMO radio channel simulator for evaluation of combined transmit/receive diversity concepts within the METRA project," in *Proc. IST Mobile Commun. Summit*, Galway, Ireland, 2000, pp. 515-520.

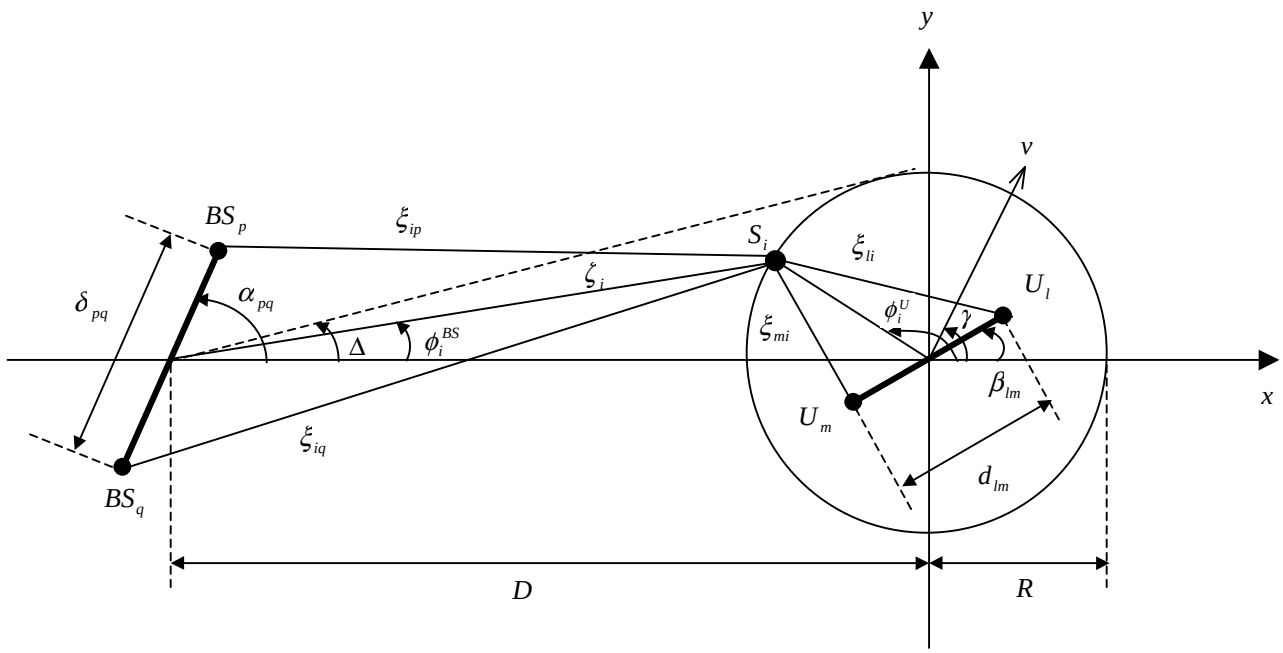

Fig. 1. Geometrical configuration of a 2×2 channel with local scatterers around the mobile user (two-element arrays for the base station and the user).

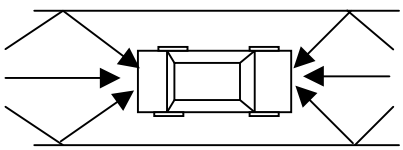

Fig. 2. Non-isotropic scattering in a narrow street.

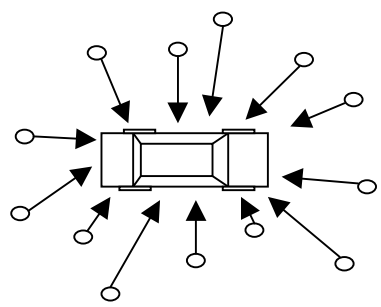

Fig. 3. Isotropic scattering in an open area (circles are scatterers).

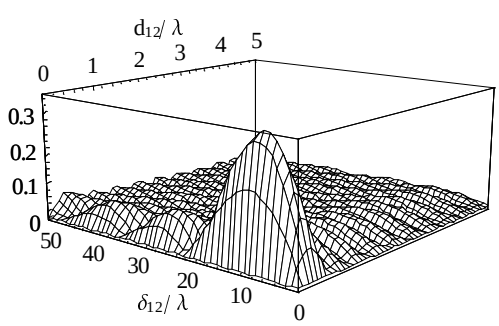

Fig. 4. Absolute error of the approximation in (9) versus antennas spacings, assuming non-isotropic scattering around the user.

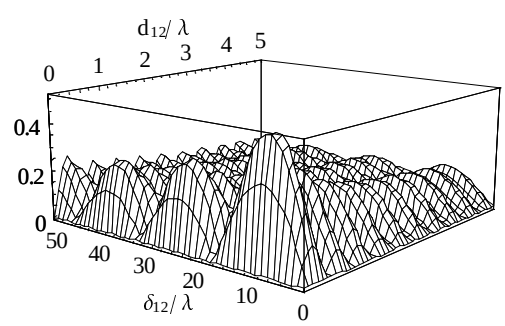

Fig. 5. Absolute error of the approximation in (9) versus antennas spacings, assuming isotropic scattering around the user.