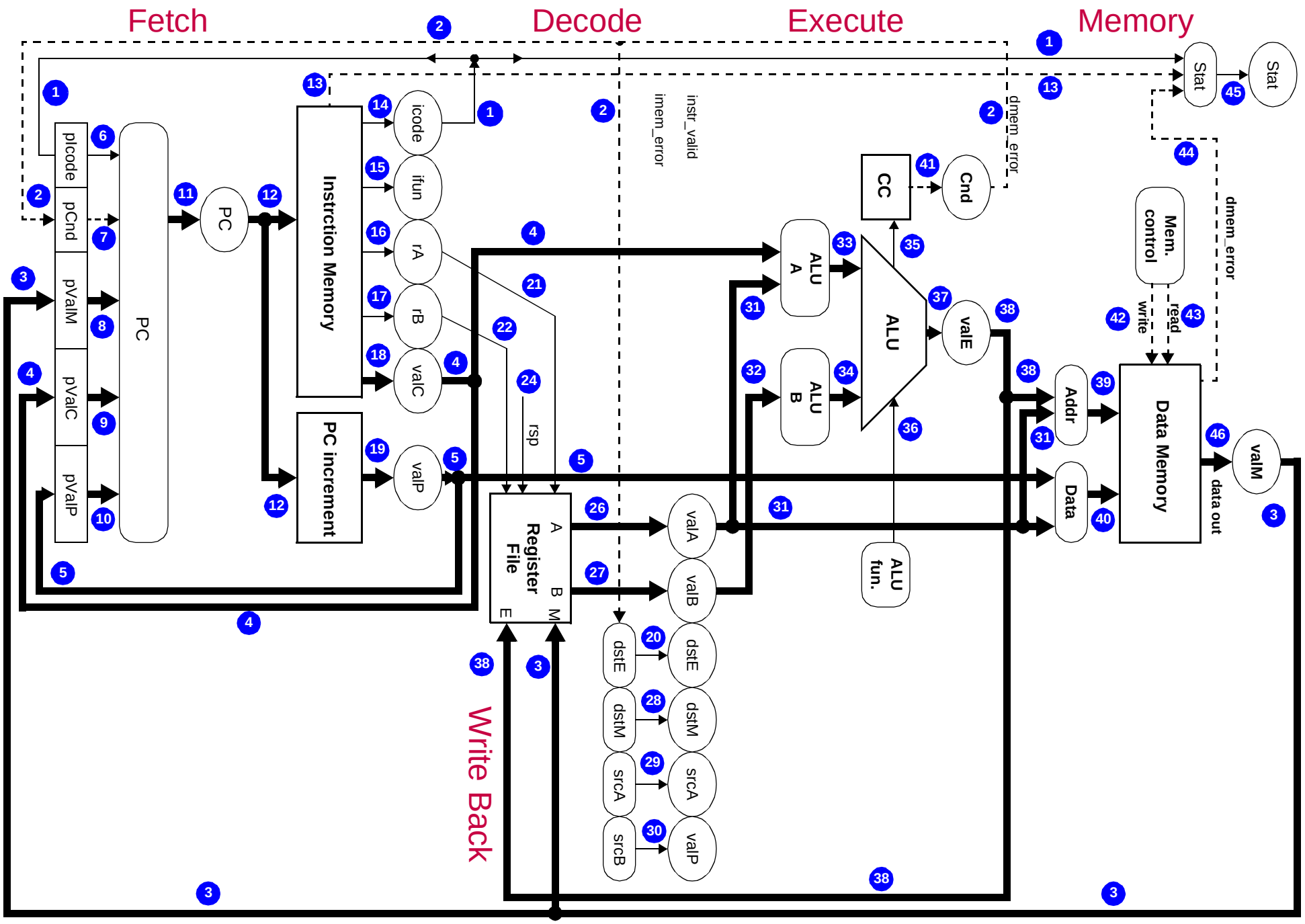
Fetch
Decode
Execute
Memory
Write Back
Stat
Stat
dmem_error
Mem. control
read
write
Data Memory
data out
valM
Cnd
CC
ALU
valE
ALU A
ALU B
Addr
Data
ALU fun.
dmem_error
instr_valid
imem_error
icode
ifun
rA
rB
valC
valP
Instrction Memory
PC increment
PC
rsp
Register File
A
B
M
E
valA
valB
dstE
dstM
srcA
srcB
dstE
dstM
srcA
srcB
valP
PC
pIcode
pCnd
pValM
pValC
pValP